SYM	ECN NO	CHANGES	DATE	SIGN	APPR.
1					

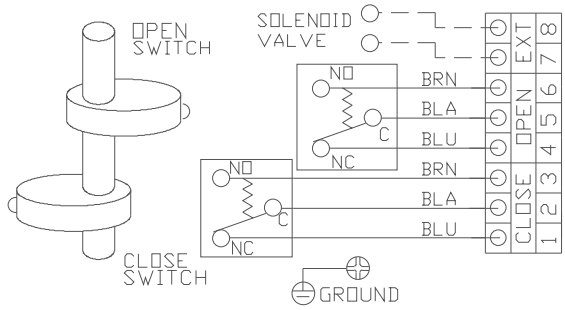

NOTE

		Jomar AUTOMATION	DRAWN	DESIGN B.H.KIM	CHECKED	APPROVER
		PART NAME ELETRIC CIRCUT 3W	SIZE A4	DATE '04.03.05	QT'Y	MATERIAL
ITS-0300		OPTION NAME P.M. SWITCH ASS'Y	DWG NO ITS0100-70000B			
ITS-0100						
APP'L,FILE						